Verso R 1500 F C5

Nominal air flow according to ErP 2018, m^3/h	1500
Nominal air flow according to ErP 2018, l/s	417
Electric air heater capacity, kW / Δt, °C	6/11,7
Supply voltage HE, V	3~400
Maximal operating current HE, A	12,1
Power supply cable E, mm^2	5×2,5
Electric power input of the fan drive at maximum flow rate, W	350
Noise power level, L_{WA}, dB(A)	53
Noise pressure level, L_{PA}, dB(A), (3 m)	41
Filters dimensions B×H×L, mm	472×402×96
Unit dimensions B×H×L, mm	1050×485×1807
Panel thickness, mm	50
Maintenance space, mm	660
Unit weight, kg	195

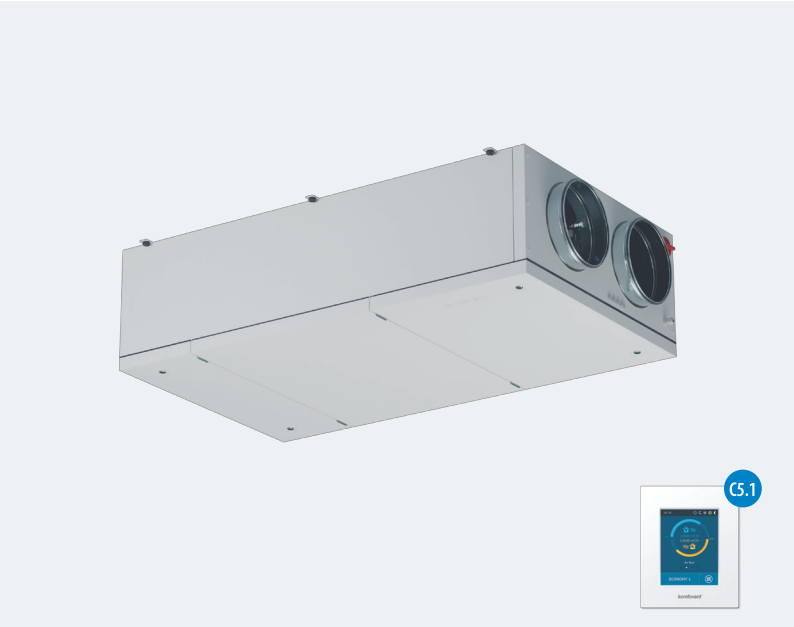

Performance

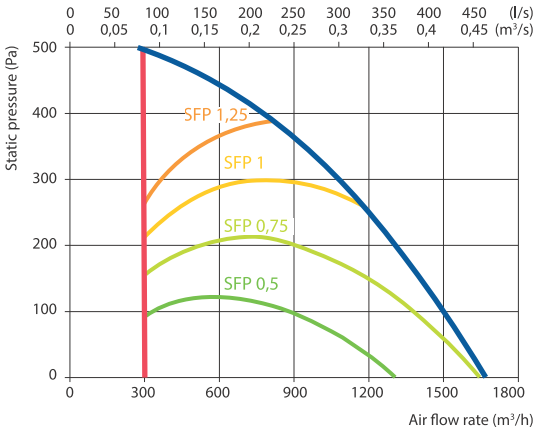

Temperature efficiency

	Winter					Summer		
Outside temperature, °C	-23	-15	-10	-5	0	25	30	35
After heat exchanger, °C	13,2	14,8	15,7	16,7	17,7	22,6	23,6	24,6

Indoor +22 °C, 20 % RH

Hot water duct air heater *

	Winter		
Water temperature in/out, °C	80/60	70/50	60/40
Capacity, kW	4,9	4,9	4,9
Flow rate, dm^3/h	213	212	211
Pressure drop, kPa	10,9	8,9	9
Temperature in/out, °C		12,3 / 22,0	
Maximal capacity, kW	13,8	11,3	8,7
Connection, ″		½	

* Option

Accessories

Closing damper		AGUJ-M-315+LF24/LM24
Silencer	ODA/EHA	AGS-315-100-900-M
	SUP/ETA	AGS-315-100-1200-M
Water heater		DH-315
Water cooler		DCW-1,4-9
PPU		PPU-HW-3R-15-1,6-W2
Outdoor grill		LD-315
2-way valve		VVP47.20-4,0+SSF161.05HF
DX cooler		DCF-1,4-10
Cooling unit		MOU 36HFN8+KA8243

Shown as right (R1)
View from inspection side

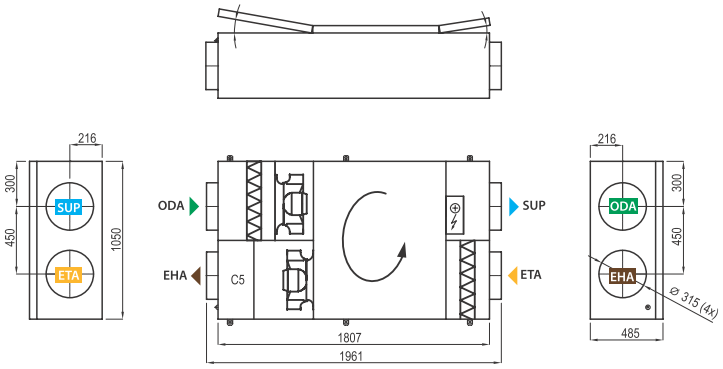

Shown as left (L1)

ODA – outdoor intake **SUP** – supply air **ETA** – extract indoor **EHA** – exhaust air